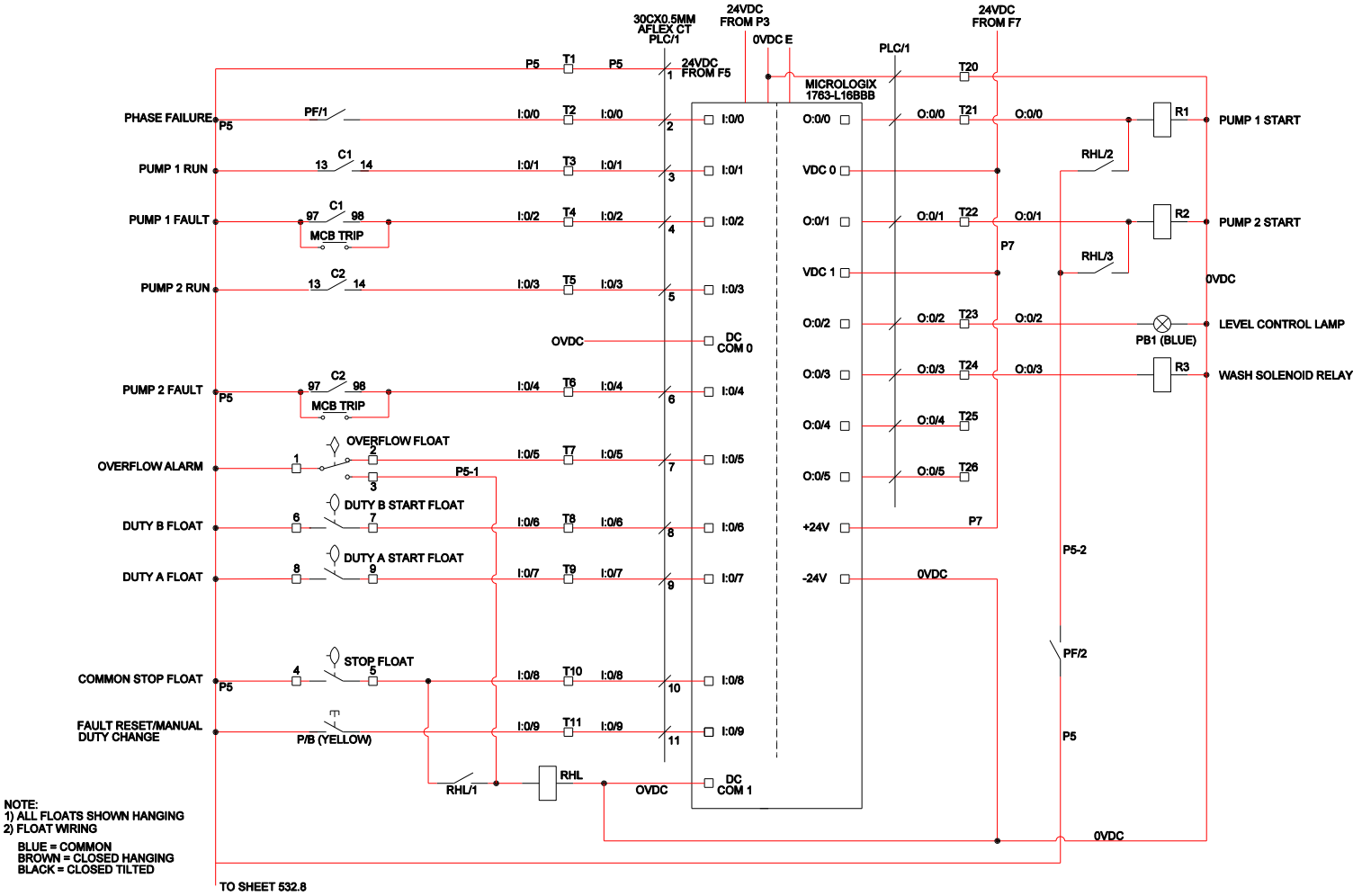


NOTE:
1) ALL FLOATS SHOWN HANGING
2) FLOAT WIRING
BLUE = COMMON
BROWN = CLOSED HANGING
BLACK = CLOSED TILTED

sheet 6 of 9

Hamilton City Council
Te kaunihera o Kirikiriroa

Development Manual

Works & Services Group
City Waters Unit

# PLC CONTROLLED PUMP STATION
# DOL - PLC CONTROL WIRING

Approved by: City Waters Manager

TS 532.6

Version: October 2010

Path G:\HCCMap\STANDARDS\TECHNICAL SPEC\Drainage\dwgs.dgn